LUTRON QED 100 - CUSTOM POCKET MOUNTED

TYPICAL MAXIMUM SIZE: 100 SQ. FT.
MINIMUM WIDTH: 24"
MAXIMUM WIDTH: 10'-0"

LIGHT GAP WITH INSIDE MOUNT: ¾" MIN. SYMMETRICAL

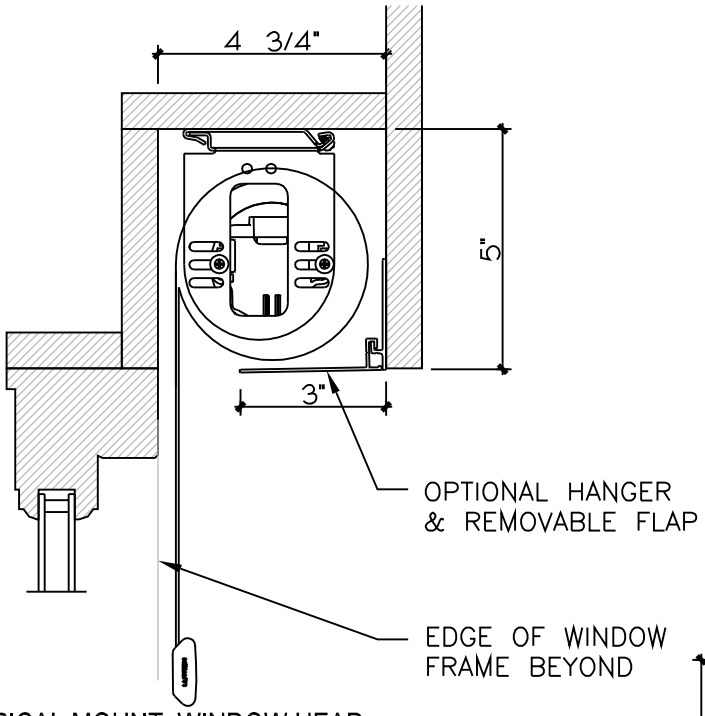

TYPICAL MOUNT: WINDOW HEAD
SCALE: 3"=1'-0"

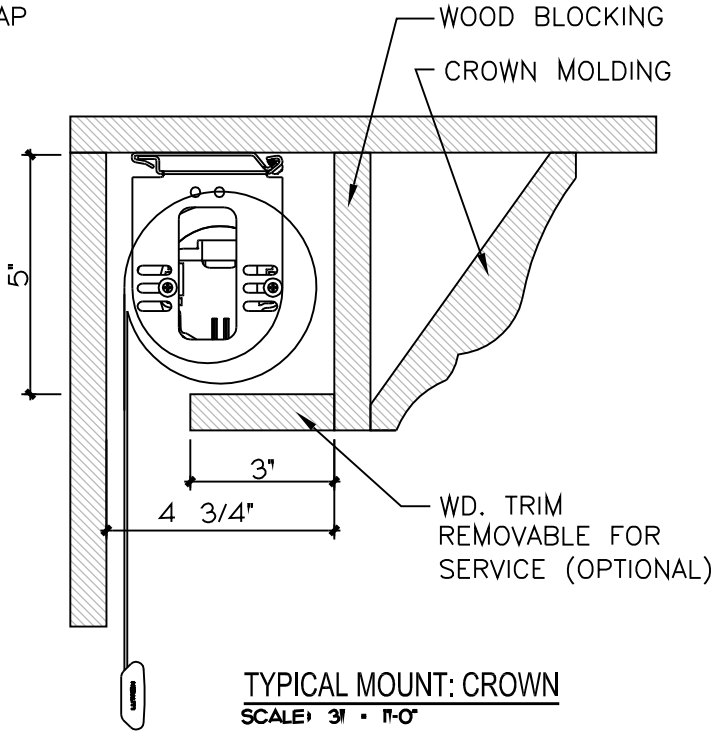

TYPICAL MOUNT: CROWN
SCALE: 3" = 1'-0"

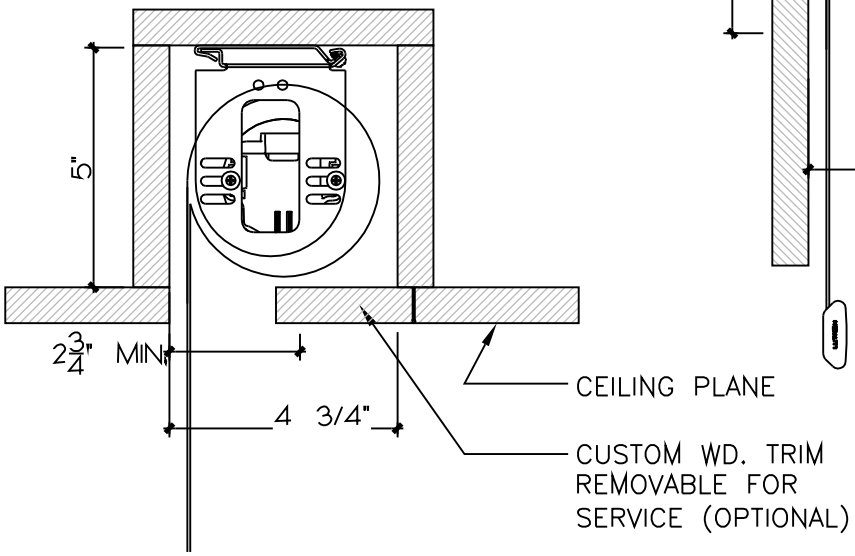

TYPICAL MOUNT: CEILING
SCALE: 3" = 1'-0"

THE BOSTON SHADE COMPANY	TITLE: LUTRON QED 100 POCKET MOUNT	DATE:08/01/09 SCALE: VARIOUS DRAWN:EU	SKETCH NUMBER 100.4
	THE BOSTON SHADE COMPANY 840 SUMMER STREET SUITE 205, BOSTON, MA 02127 T. 617.268.7460 F. 617.268.7461		